BAKER SF 500

PROCESS SC 500 / SC 710

User manual

Gram-Professional ApS
Aage Grams Vej 1
6500 Vojens
Denmark
CVR-No. 43 12 21 93

Contents

Application 4
Safety information 5
Location 6
General description 8
Refrigerant / GWP value 9
Climate / temperature class 9
Electrical connection 10
General use 11
Commissioning 13
Connection, display and loading of the software 14
Initial defrosting of the evaporator (connection when the unit is cold) 15
Storage program (connection when the unit is warm) 15
Display of the setpoint (temperature setting) in the storage program 16
Setting of the setpoint (temperature setting) in the storage program 16
Time-controlled cooling "HCL" 17
Temperature-controlled cooling (Hard Chill) 18
Temperature-controlled cooling (Soft Chill) 19
Thawing program 20
Manual defrosting of the evaporator 20
Automatic defrosting of the evaporator 20
The user menu 21
Dry cooling 22
Alarm and error messages on the display 22
Deleting alarm messages 23
Door monitoring 24
Cleaning the condenser filter 24
Defrost water 25
Door closing mechanism 26
Power failure 26
Cleaning 26
Door gaskets 27
Long term storage 27
Service 28
Disposal 29
EC-Declaration of conformity 30
Wiring diagram SF 500 – SC500 – SC - 710 32
Piping diagram SF 500 – SC 500 – SC 710 38

ENGLISH

Thank you for choosing a quality product from Gram Professional.

This manual will advise you how to install, use and maintain your new product.

Before our products leave the factory, they undergo a full function and quality test.

Should you nevertheless experience problems with the product, then contact your local dealer. Gram Professional representatives and dealers placed all over the world are ready to help you.

Please refer to your dealer for information about the warranty coverage of your new product.

Any warranty is subject to correct use according to specifications in this user manual, where e.g. common maintenance and eventual repairs are carried out by authorized technicians with proper knowledge of the product and only using original spare parts.

Changes in installation and other use of the product than prescribed in this manual, might affect the operation and durability of the product.

The manual is written according to our current technical knowledge. We constantly work on updating this information, and we reserve the right to make technical changes.

Application

This product is designed for chilling or freezing of foodstuff.

The product is only to be used for the purpose for which it has been expressly designed. Any other use could cause that the foodstuff stored in the product is not kept at the correct temperature or even damage the product.

The product is not suited for storing blood plasma, laboratory samples, pharmaceuticals or similar substances.

The manufacturer will not be held liable or responsible for any damage caused by improper, incorrect or unreasonable use of the product.

Safety information

Important

Description of symbols used in this manual.

Warning Lacking observation to these instrucions might result in accidents with personal injury.

Important If these instructions are not observed, the product might be damaged or destroyed.

Be aware that Gram Professional has taken precautions to ensure that the safety of the product is in order.

Please read carefully the following information regarding safety.

It is important, that everyone who are to use or install the product, to have access to this manual.

This appliance is not intended for use by persons with reduced physical, sensory or mental capabilities, or lack of experience and knowledge, unless they have been given supervison or instruction concerning use of the appliance by a person responsible for their safety.

Children should be supervised to ensure that they do not play with the appliance.

The appliance might contain parts with sharp edges in the compressor compartment, and in the inside compartment.

The appliance is not to be transported on a sack truck, there is a danger of loosing the balance, causing danger to persons.

Do not pull the power cord to dicconnect the appliance, or when moving the appliance.

Location

When receiving the product, check the packaging material for damage.

If any damage occurs at the packaging material, it should be considered if the product might have been damaged too. If the damage is substantial, please contact your dealer.

The transport pallet can be removed by loosening the screws that fasten the pallet to the product.

⚠ This task requires at least 2 persons.The heaviest part of the product is at the top. Be aware of this, when removing the transport pallet.

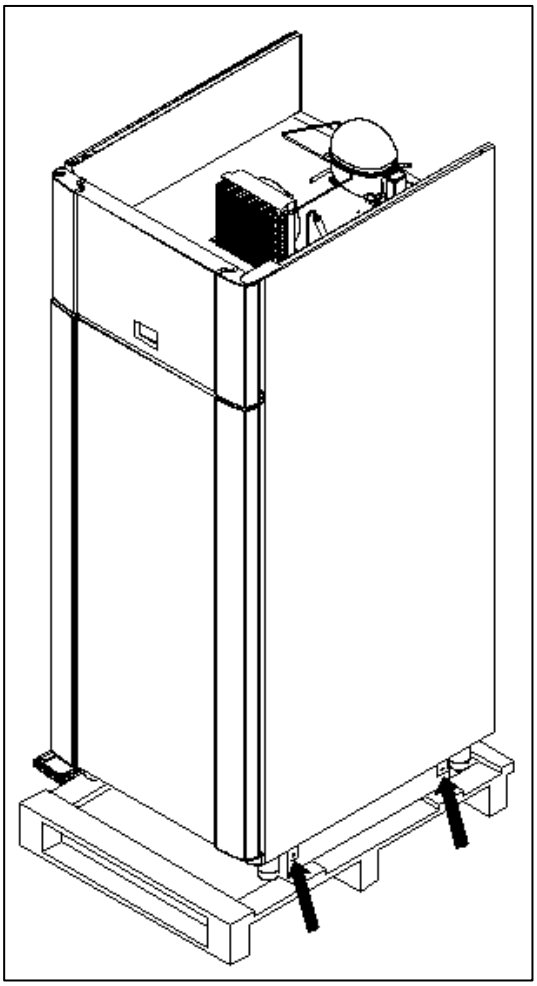

Fig.1

If the cabinet has been transported in horizontal position it must stand upright at least 2 hours before it is started to allow the oil from the compressor to run back.

Because of the heavy weight of the product, the floor might be damaged or scratched when moving the product.

Correct set up gives the most effective operation.

The product should be located in a dry and adequately ventilated room.

To ensure efficient operation, it may not be placed in direct sunlight or against heat-emitting surfaces. The product is designed to operate in an ambient temperature between +16°C and +40°C.

Avoid placement of the product in a chlorine/acid-containing environment (swimming bath etc.) due to risk of corrosion.

The product and parts of the interior is equipped with a protecting film, which should be removed before use.

Clean the product with a mild soap solution before use.

The set up place must be level and horizontal.

For versions with legs, use the adjustable legs to make sure that the product stands level and upright.

For versions with castors, the locking devices of the two front castors must be activated, when the product is in place. The base must be level, and the product may not be placed on frames or the like.

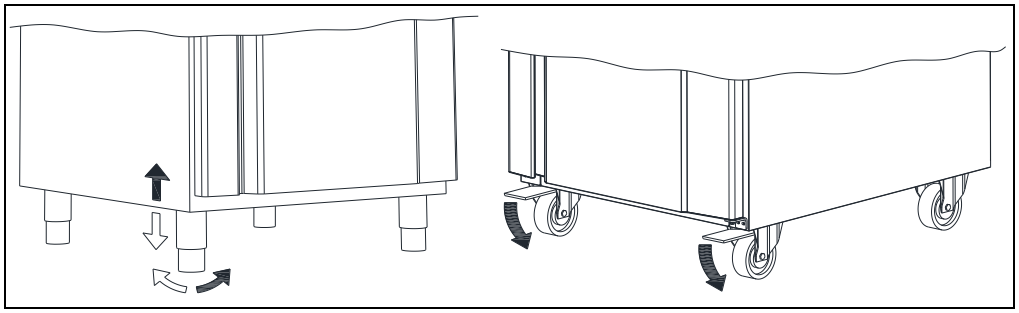

Fig. 2

General description

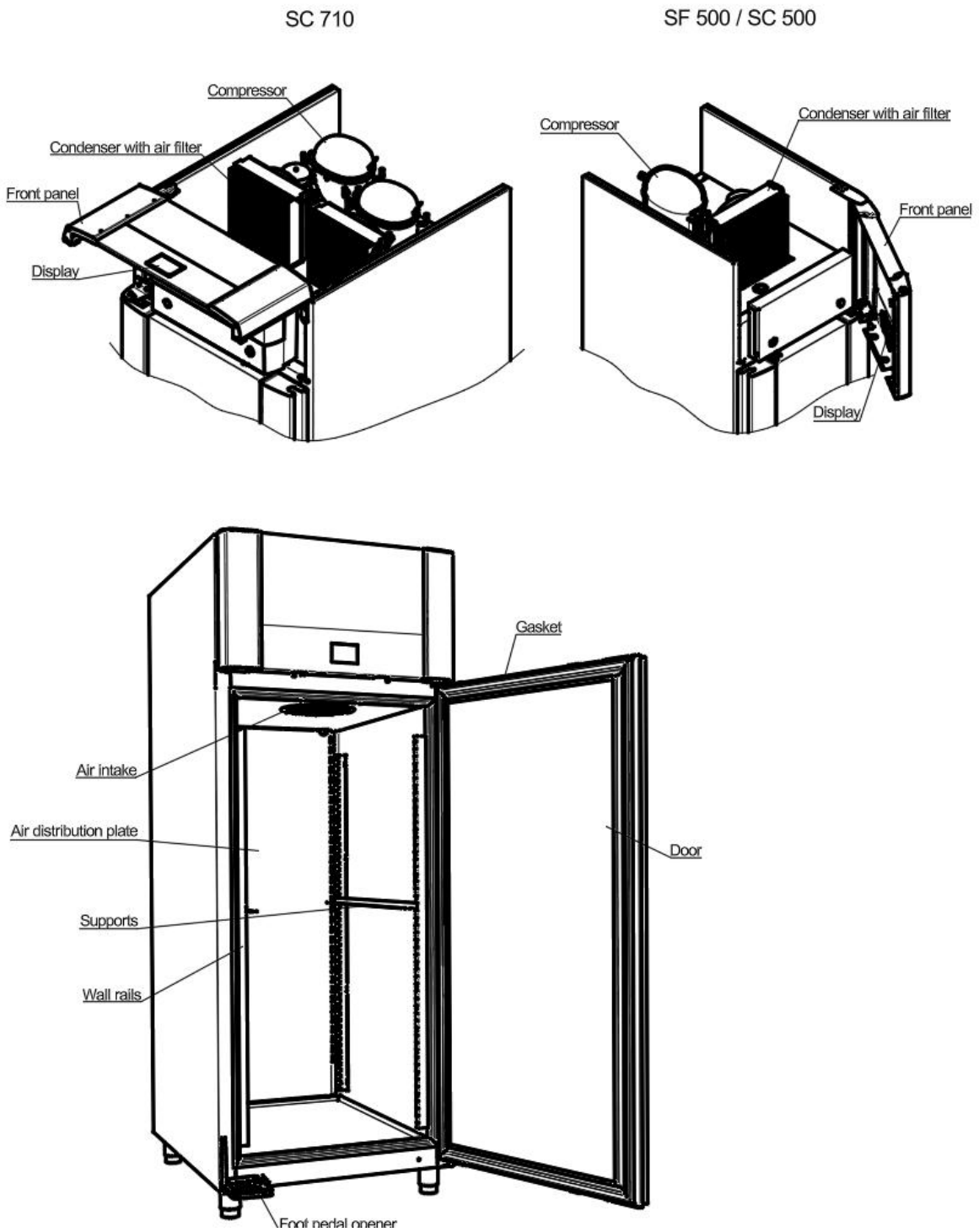

Fig. 3

Refrigerant / GWP value

	Refrigerant	Charge kg	GWP	CO_2 equivalent
BAKER SF 500 G	R290	0,145	3	0,4
BAKER SF 500 R (Remote)	Remote	0	0	0
PROCESS SC500 G	R290	0,150	3	0,45
PROCESS SC710 G	R290	2 x 0,149	3	0,894

Climate / temperature class

Products are tested according to the following climate and temperature classes. Information about the product's climate and temperature class can be found at the name plate (see fig.7)

Climate class	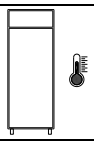
3	25°C / 60 % RH
4	30°C / 55 % RH
5	40°C / 40 % RH

Temperature class	
L1	-18°C
M1	+5°C

Electrical connection

Read the text below thoroughly before electrical connection.

The product is intended for connection to alternating current. The connection voltage (V) and frequency (Hz) are shown on the name plate in the cabinet (see Fig. 7). Only the supplied cord is to be used.

Never use an extension cord for this appliance!
If a wall socket is placed in a longer distance than the length of the supplied power cord, contact an electrician to establish a wall socket within the range of the supplied power cord.

If the product is defective, it must be examined by an authorized technician with proper knowledge of the product during the guarantee period, if it is a product with built-in compressor.
If it is a product connected to an external compressor unit, it must be examined by the company who has connected the product to the unit.
Outside the guarantee period, it is advisable to use the service advised by your dealer. If this is not the case, assistance is required from an authorized technician with proper knowledge of the product.

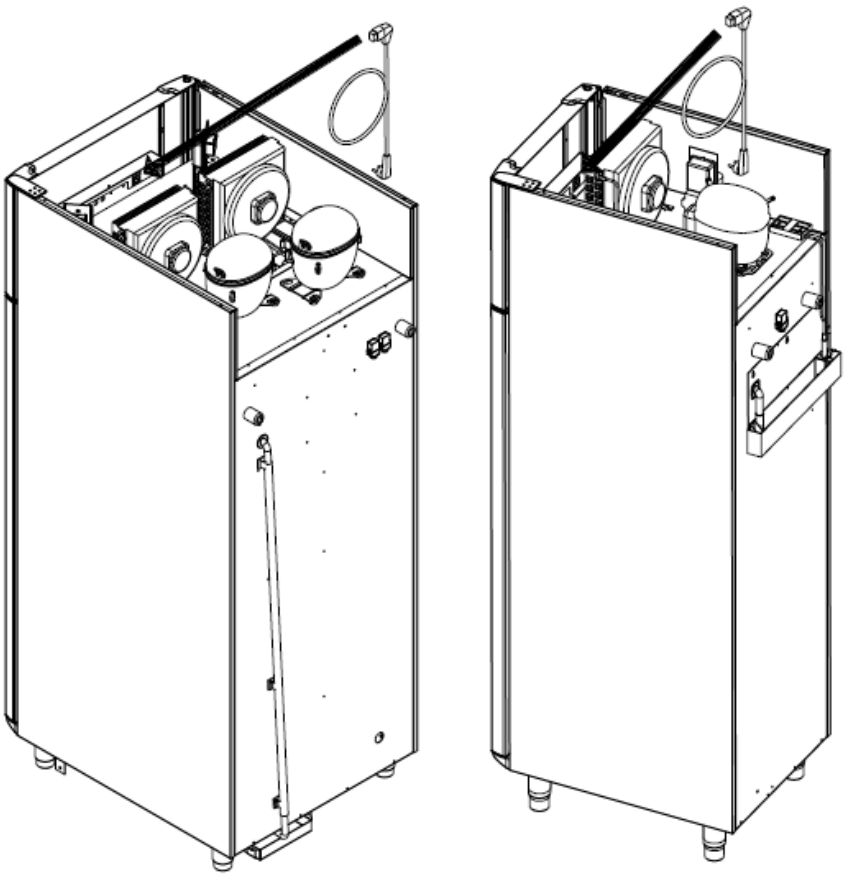

Fig. 4

Always disconnect the power if interruptions in power supply occur, and when electrical parts are removed/put on, and before cleaning and maintenance of the product.

Repairing of electrical/technical parts may only be performed by authorized technicians with proper knowledge of the product.

Do not use the product before all coverings are installed, so that live or rotating machine parts can not be touched.

The product is not to be used outdoor.

All earthing requirements stipulated by the local electricity authorities must be observed. The plug and wall socket should then give correct earthing. If necessary, contact an electrician.

Make sure the product is switched off at the socket before service is performed on electrical parts. It is not sufficient to switch off the product by the START/STOP key as there will still be voltage to some electrical parts of the product.

General use

Do not block vent holes in the front panel.

Do not damage the refrigeration system parts.

During normal operation, some parts of the refrigeration system in the compressor compartment might reach high temperatures, and could therefore cause burns if touching these components.

Do not use electrical devices inside the product.

To ensure correct and efficient air flow in the cabinet, the shaded areas must be kept free of items. (see Fig. 5)

All items to be stored, that are not wrapped or packed, must be covered in order to avoid unnecessary corrosion of the inner parts of the cabinet.

If any controller parameters are changed from default, this could cause that the product is not functioning normally, and harmful temperatures could damage items that are kept inside the product.

If the product is turned off, wait minimum 3 minutes before turning it on again. This is to protect the compressor from damage

Maximum loading of wire shelf: 40 kg

Do not store explosive substances such as aerosol cans with flammable propellant in this appliance.

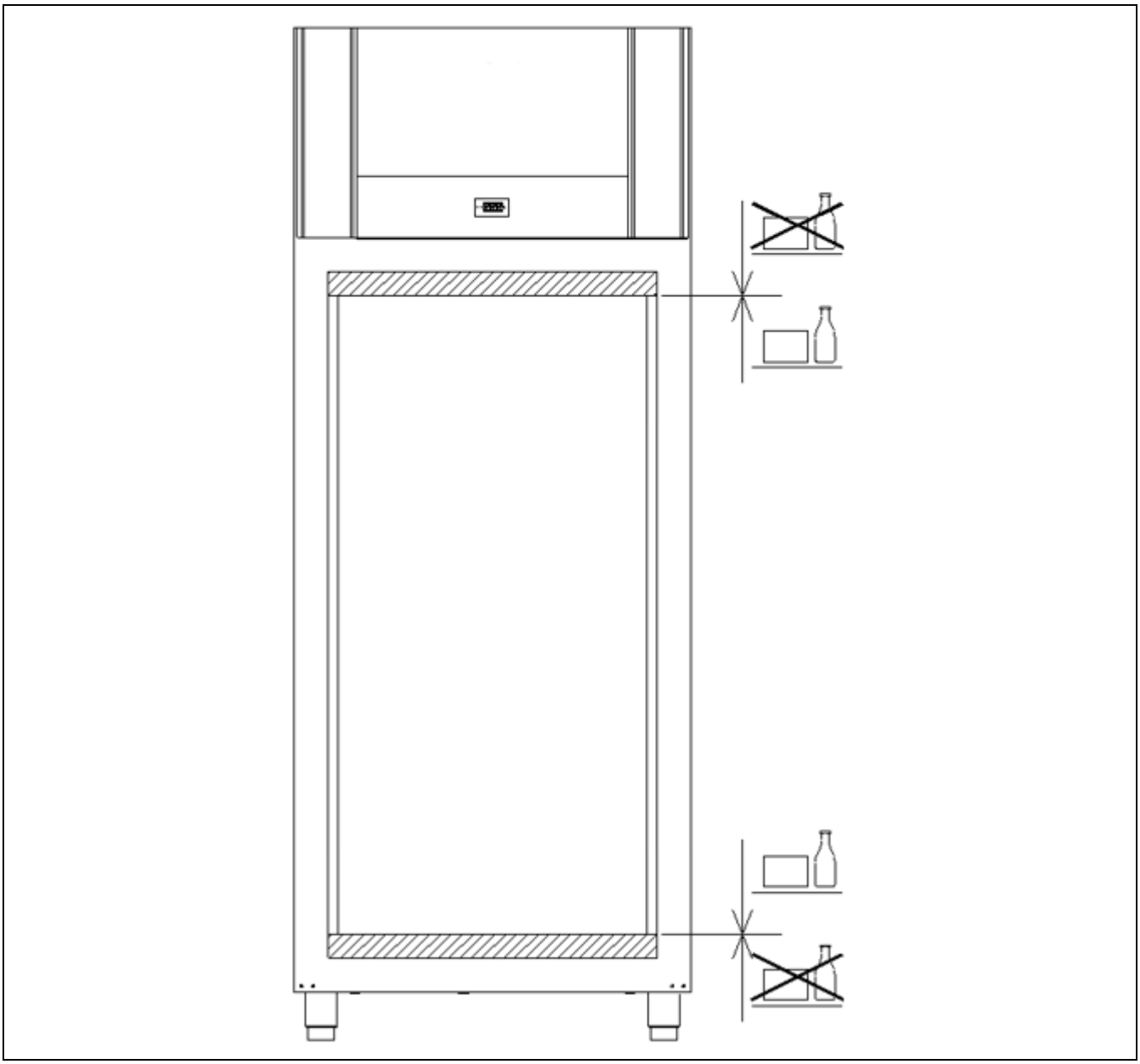

Fig. 5

Commissioning

Overview of the control panel:

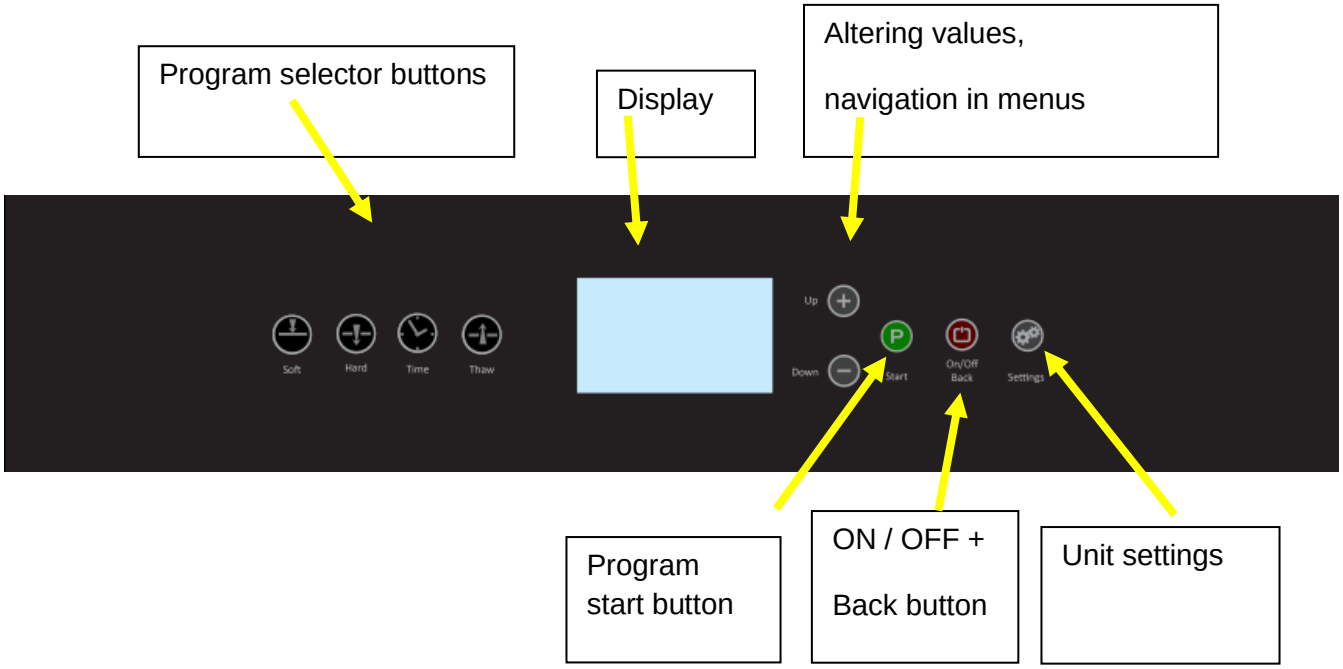

Overview of the display:

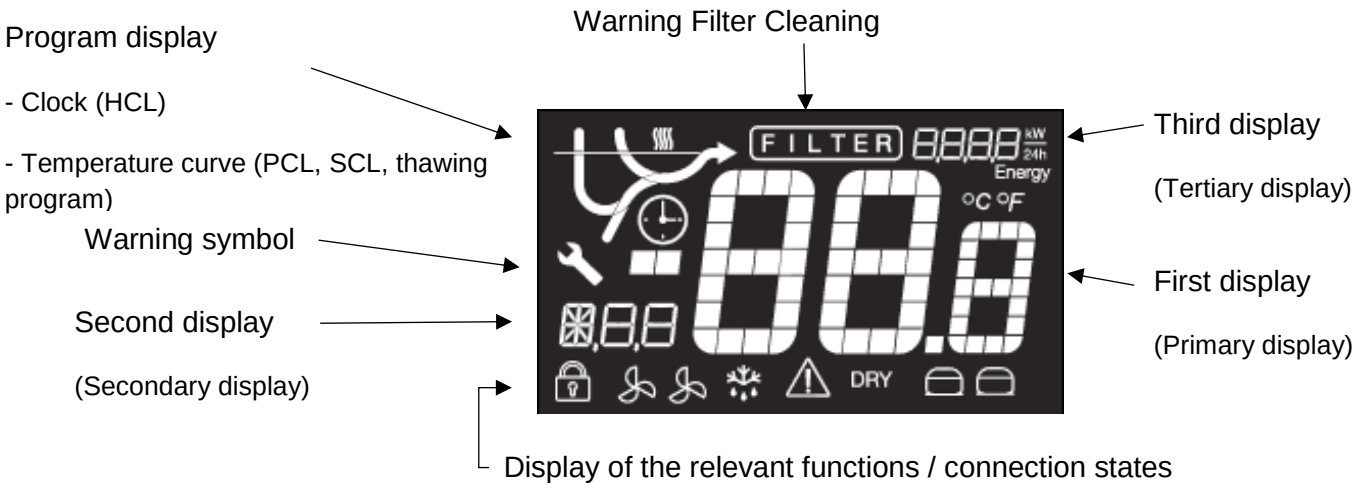

Function bar:

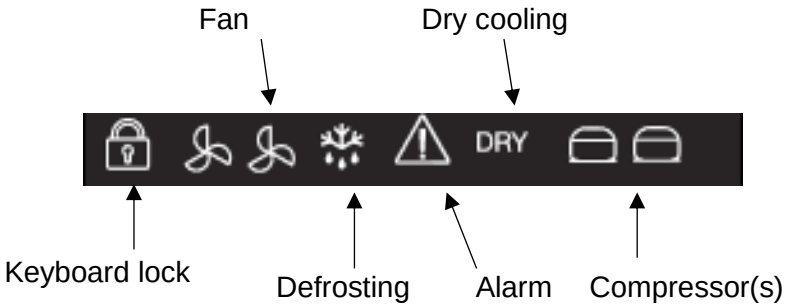

Connect the cabinet to the mains.

Please note! During maintenance and repairs, it must be ensured that the unit has no voltage applied to it. So take the plug out of the socket, or shut off the power! It is NOT sufficient to switch the unit off with the START/STOP button, since the unit in such case still has the mains voltage applied to it.

Connection, display and loading of the software

	Switch the unit on with the on/off button

Once the unit has been connected up, all segments in the display will light up in white for approx. 3 seconds (display test).	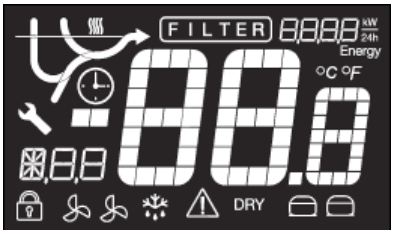
Subsequently, the selected program will be shown on the secondary display - "P05" in this case. The program "P05" controls 2 compressors. Hence both compressor symbols will light up in blue.	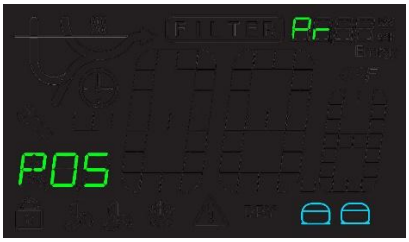
Afterwards, all used segments will be displayed in their respective colours. The secondary display will also show the software version - "4.0" in this case.	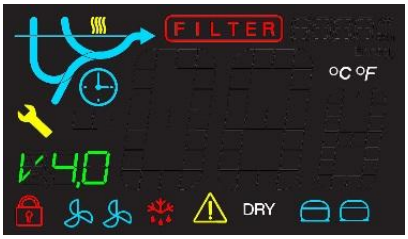
Finally, the secondary display will show yet another version number for the software. When this display ends, the unit is ready for operation, and the temperature is shown in the primary display.	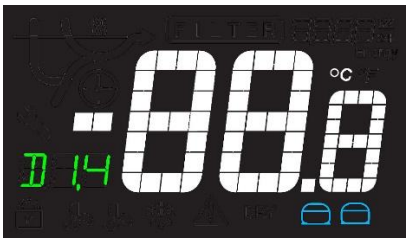

Initial defrosting of the evaporator (connection when the unit is cold)

If the unit is in use and it is cold in the room, the program starts with a defrosting cycle:

In connection with this, the display shows the temperature internally within the unit.

The defrosting symbol is lit up:

⚠ Do not use pointed or sharp objects to make defrosting go faster!

Storage program (connection when the unit is warm)

If the unit is started in a warm state (normal room temperature internally inside the unit), then it will immediately switch to the storage program

In connection with this, the display shows the temperature internally within the unit.

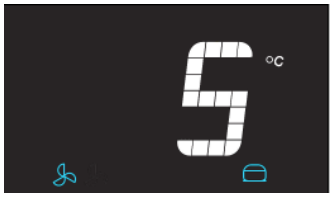

Display of the setpoint (temperature setting) in the storage program

Press the (P) button, and hold it in.
The display then shows the "desired value" and thereby the temperature setting.
SF 500: -18ºC

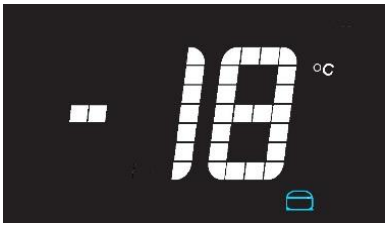

Setting of the setpoint (temperature setting) in the storage program

Press the (P) button, and hold it in. The display then shows the "desired value" and thereby the temperature setting. When the (+) or (-) button is lightly pressed (the (P) button continues to be held in), the value is increased or lowered.

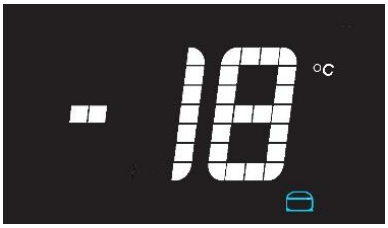

When the (P) button is released, an auditory signal is issued and the value is saved. The display once again will show the internal temperature within the unit.

Time-controlled cooling "HCL"

	This program is time-controlled only. The air temperature and the temperature of the contents of the cabinet are not taken into account. Both compressors perform the cooling in parallel. The second compressor starts 15 seconds after the first one. When the proper evaporator temperature is attained, the fan will be running audibly with a very high RPM figure. **The program is selected by pressing the button :**

When the button is pressed, it will stay lit continuously, and the P, + and - buttons will blink. The symbol for the clock will light up. The secondary display will show the program name "HCL" and the tertiary display the selected duration in minutes. The symbols for a high fan RPM figure and operation with 2 compressors will be blinking.

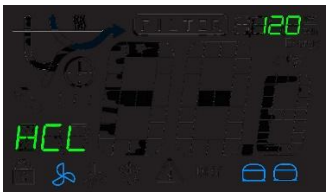

The + and - buttons are used to change the time, and P for starting the program.

While the program is running, the time will count down on the tertiary display. The primary display will show the current temperature inside the unit. In addition, the connected elements will now be continuously lit: both compressors, both fan symbols for a high fan RPM figure in the inner room.

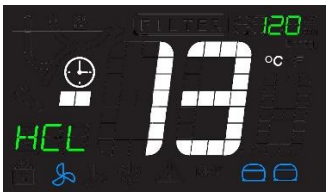

After the preset period of time expires, an acoustic signal is emitted.
After the signal, defrosting is commenced (if such is required based upon the evaporator sensor's temperature). Then it subsequently switches to the storage program. Hence the desired value for the storage program must always be set and checked before starting "HCL"!

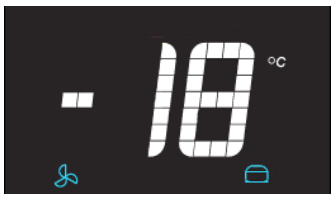

Temperature-controlled cooling (Hard Chill)

	This program cools down to the selected, desired value at full motor power (controlled with the use of the extra sensor). **Both compressors perform the cooling in parallel. The second compressor starts 15 seconds after the first one. When the proper evaporator temperature is attained, the fan will be running audibly with a very high RPM figure.** **The program is selected by pressing the button :**

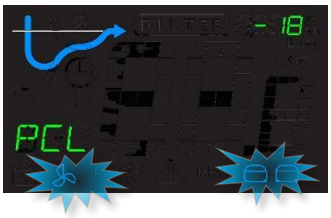

After pressing the button, it will be lit continuously. The P, + and - buttons will be blinking. The curve symbol for Hard Chill will light up. The secondary display shows the program name "PCL", and the tertiary display the selected, desired temperature value.

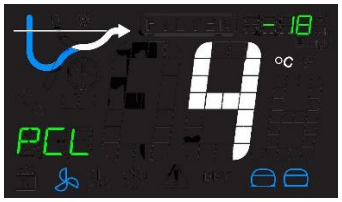

The + and - buttons are used to change the desired value, and P for starting the program.

The primary display will now show the current temperature in the room, the secondary display the program name "PCL" and the tertiary display the selected, desired temperature value. The curve symbol is now continuously displayed. In addition, the connected elements will now be continuously lit: compressors, fan symbol.

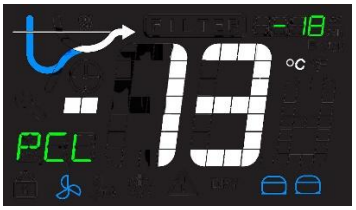

When the desired value is attained, an acoustic signal will be emitted.
After the signal, defrosting is commenced (if such is required based upon the evaporator sensor's temperature). Then it subsequently switches to the storage program. Hence the desired value for the storage program must always be set and checked before starting "PCL"!

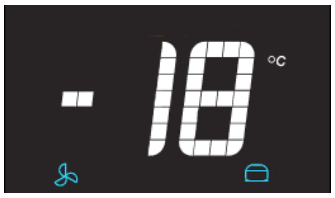

Temperature-controlled cooling (Soft Chill)

	This program gently cools down to the selected, desired value (controlled using room sensor).

Both compressors perform the cooling in parallel. The second compressor starts 15 seconds after the first one. The fan runs at a high RPM figure.
The program is started by pressing the button .

Temperature changes with Soft Chill: The program is governed solely by the room sensor. The air temperature and goods being chilled are thus taken into account. The elapsed time has no effect on the course of the program. The cooling system works with start/stop cycles with a gradient up to the preset storage temperature. The process stops as soon as the temperature value reaches 0 °C, and the controls switch to the storage program.

After pressing the button, it will be lit continuously. The P, + and - buttons will be blinking. The curve symbol for Soft Chill will light up. The secondary display shows the program name "SCL", and the tertiary display the selected, desired temperature value. The + and - buttons are used to change the desired value, and P for starting the program.
The primary display will now show the current temperature in the room, the secondary display the program name "PCL" and the tertiary display the selected, desired temperature value. The curve symbol is now continuously displayed. In addition, the connected elements will now be continuously lit: compressors, fan symbol.

When the desired value is attained, an acoustic signal will be emitted.
After the signal, defrosting is commenced (if such is required based upon the evaporator sensor's temperature). Then it subsequently switches to the storage program. Hence the desired value for the storage program must always be set and checked before starting "SCL"!

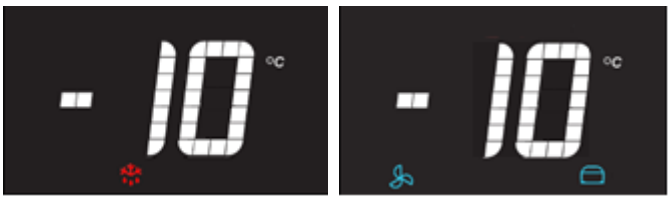

Thawing program

	In connection with thawing, a defrosting heating element is used, which is governed by the temperature that the room sensor measures. The thawing program is only able to start when the desired temperature value is set to between +2°C and +8°C. **The program is started by pressing the button .**

starts the function.

When the desired value is attained, an acoustic signal will be emitted.
After the signal, defrosting is commenced (if such is required based upon the evaporator sensor's temperature). Afterwards, the storage program is switched to.
SF 500: -18ºC

Manual defrosting of the evaporator

Manual defrosting is only possible as initial defrosting:

Start a program: Press on (wait for 10 seconds).

Press on in order to end/interrupt the program again. This then causes defrosting to be commenced

Do not use pointed or sharp objects to make defrosting go faster!

Automatic defrosting of the evaporator

The unit performs automatic defrosting 1 to 8 times daily, when the "PCL", "HCL" and "SCL" programs have finished. Defrosting cannot be concluded manually! In connection with this, the internal temperature inside the unit is shown before the defrosting process commences.

The user menu

	The user menu is opened by pressing the button for approx. 3 seconds.

Navigate through the menu using the using the (+) and (-) buttons, after which the selected menu item is opened with the button (P). The (+) and (-) buttons increase or decrease the value. They are also used to navigate around in the submenu ("LAL"). The manner of procedure is the same in the submenu. Altered values are saved by pressing on (P) (receipt acoustic signal!). The menu items or the menu are exited by pressing .

Menu item		Description	Settings range	Factory setting
DC		Dry cooling function *	Activation: **"ON"** Deactivation: **"OFF"**	OFF
LAL	**Local alarm (display)**			
	LHL	upper boundary value for LAL	+25 … -35 °C	+25 °C
	LHd	Delay for LHL	1 … 120 min / in steps of 5 minutes	60 min
	DA	Door alarm	0 = off / 1 = on	1
	Dad	Delay for door alarm	0 … 15 min	1
	BU	Acoustic alarm for LAL	0 = off / 1 = on	1
CAL	**Temperature offset (sensor harmonisation)**			
	CA	Temperature offset sensor input A (room sensor)	-5 … +5 K / steps of 0.5 K	0.0 K
	CE	Temperature offset sensor input A (room sensor)	-5 … +5 K / steps of 0.5 K	0.0 K
ALL		Relative (escorted) or absolute (fixed) alarm limits	ESC = escorted / FAS = fixed	FAS
DEF		Number of defrosting cycles for each 24 hours	0 … 8	4

Dry cooling

DRY	**Dry cooling function may only be selected via the user menu. The user menu is opened by pressing the button for approx. 3 seconds. The function can now be switched in or out under the DC menu item, saved with P , after which the menu is exited with .**

Menu item	Description	Settings range	Factory setting
DC	Dry cooling function *	Activation : **”ON”** Deactivation: **"OFF"**	OFF

Alarm and error messages on the display

Display	Explanation
OP	The door is open (or the door switch is closed in another manner).
A1	Door alarm ”dA” was activated.
A2	Local alarm, maximum value was activated (LHL)
F1	Room temperature sensor is defective. The sensor must be replaced by the service department. The cabinet will still approximately maintain the preset temperature with the use of an emergency program.
F2	If ”F2” is shown, the evaporator sensor is defective, or there is extreme icing up of the evaporator. Initially, the unit must be completely defrosted one single time (disconnected, after which the cabinet must stand with an open door for 24 hours)**, Important - condensation container under the unit may run over in connection with this!)**. If the fault subsequently continues to be displayed, then the service department must replace the sensor a quickly as possible. The preset temperature will continue to be maintained, and the defrosting phase will occur gradually without temperature restrictions.

Display	Explanation
F3*	If "F3" is displayed, there are problems with the condensation sensor. This sensor only protects against overheating, and it has no influence on the temperature regulation in the cabinet. It ought however to be replaced as quickly as possible, so the protection against overheating is re-established
F4*'**	Faults in the second condensation sensor in connection with units with two cooling motors (see fault message "F3").
F5	Fault in the temperature sensor for PCL (hard chill). The sensor must be replaced, contact the service department. Affects only hard chill
F7*	Overheating of condenser or undercooling, filter mats or condenser fins plugged up, fan defective, ambient temperature too high or low (unit not in operation with ambient temperature of under +10 °C)
	*does not apply for models with external cooling motors ** does not apply for the SF 500 / SC 500

Deleting alarm messages

A1	**The A1 alarm is deleted by pressing the button (P).** **!Door must be closed first**
A2	**The A2 alarm is deleted by pressing the button (P).** **!The temperature in the cabinet must first be under the desired maximum temperature (25**°C **Default)**

Door monitoring

When the door is opened, "OP" is shown in the primary display.	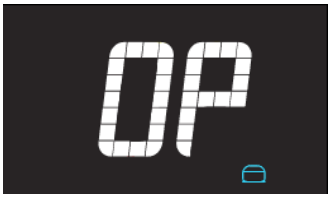
An acoustic signal is emitted, and the "A1" message is shown on the secondary display, if the door at a minimum is open in "**Dad**", and "**BU**" is connected. The acoustic alarm is deleted by pressing (P). The alarm indicator only or first shuts off once the door has also been closed.	

Cleaning the condenser filter

Reminder of cleaning the condenser air filter:

After 600 compressor running hours the filter must be cleaned and it is indicated by warning lights: FILTER 🔧 ⚠.
If the cleaning is not completed within 650 hours, the warnings continue, and an acoustic alarm sounds.

Resetting the FILTER alarm after cleaning the condenser filter:

After cleaning the air filter, the controller must be reset to remove the alarms.
It can only be reset by using a certain key combination.

- Push ⏻ three times followed by pushing (P) three times. FILTER alarm lights green and will disappear after 1 minute.

Defrost water

The product produces water during defrosting, which is led into a tray under the product or at the back of the product.

An electrical heating element, placed in the tray, re-evaporates the water.

It is recommended to clean the tray and corresponding parts at least once a year.
Remember to disconnect the cabinet before cleaning.
Be careful not to damage the heating element during cleaning.

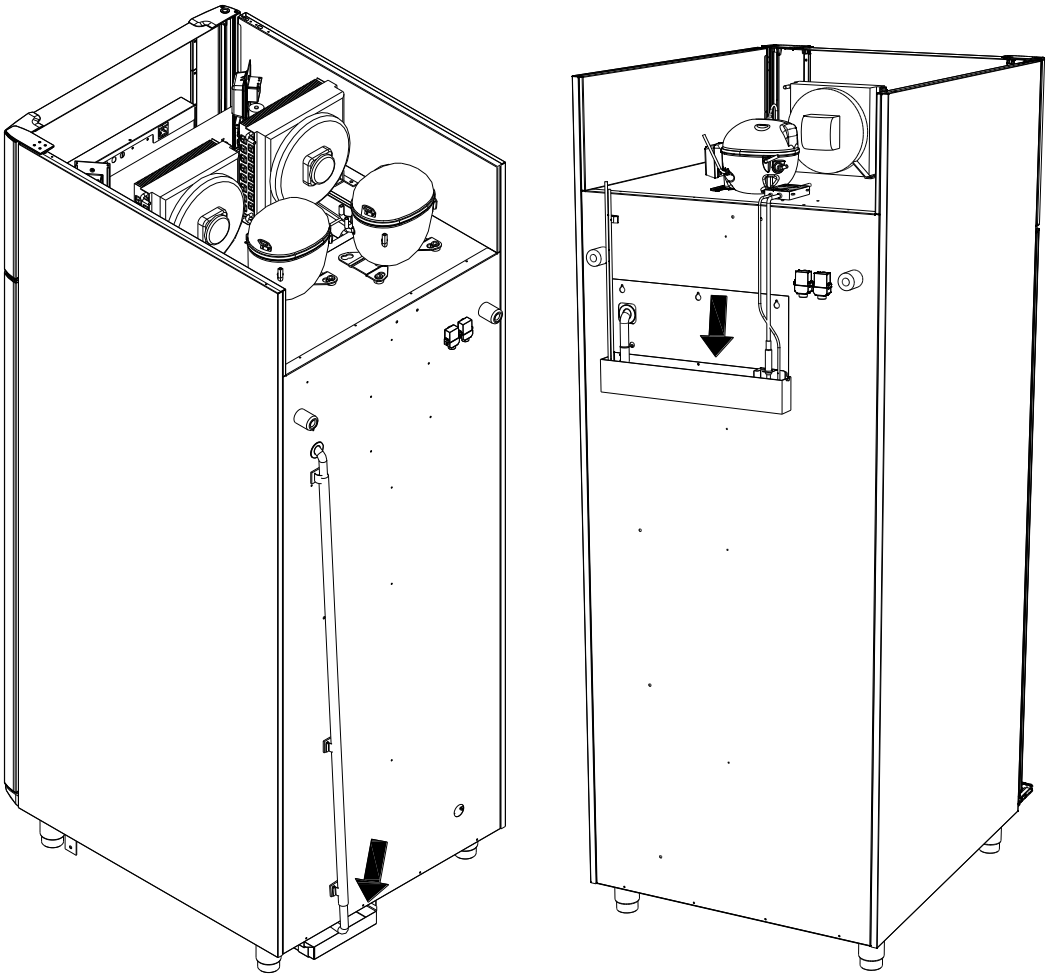

Fig.6

Door closing mechanism

The door is equipped with a self-closing system. If the door is opened less than 90°, it will close by itself. If the door is opened more than 90°, it will stay open.

The door can be opened by using the foot pedal. This leaves both hands free when placing foodstuffs the cabinet.

Power failure

In the event of a power failure, the control remembers the temperature setting and restarts the product when power is restored. If the power failure persists for some time, the control might revert to the factory setting.

Cleaning

Insufficient cleaning will cause that the product will not work at optimum perfomance, or eventually it will be defective.

Before cleaning, the product should always be disconnected.

Do not flush the product with water, do not use water jet or steam hose as this may cause short-circuits in the electrical system.

Cleansing agents containing chlorine or compounds of chlorine as well as other corrosive means, **are not to be used**, as they might cause corrosion to the stainless panels of the cabinet and the evaporator.

The compressor compartment and in particular the condenser must be kept free from dust and dirt. This is best done by cleaning the compressor compartment and the condenser air filter with a vacuum cleaner, if dust/flour is the matter. The air filters on the condenser and the front panel can be removed and cleaned in hot water (at max. 50°C).

For the external maintenance – use stainless steel polish.

The product should be cleaned internally with a mild soap solution at suitable intervals and checked thoroughly before it is put into operation again.

Door gaskets

This chapter deals with the importance of a well-functioning door gasket.

Gaskets are an important part of a refrigerator/freezer. Gaskets with reduced functionality, reduces the tightness of the cabinet. Reduced tightness might cause increased humidity, internal icing, an iced up evaporator (leading to reduced refrigeration capacity), and in worst case reduced lifecycle of the cabinet.

Therefore it is important to be aware of the condition of the gasket. Regular inspection is recommended.

The gasket should be cleaned regularly with a mild soap solution.

If a gasket needs replacement, contact your supplier.

Long term storage

If the product is taken out of operation, and need to be prepared for long-term storage, clean the inside compartment, the door and door gasket thorougly with a hot soapy damp cloth.
Eventual remnants of food could create mould.

Service

The refrigerating system and the hermetically sealed compressor require no maintenance - they merely must be kept clean.

If refrigeration fails, first investigate whether the unit has been unintentionally disconnected or switched off at the socket, or whether a fuse has blown.

If it is not possible to find the cause of the refrigeration failure, please contact your dealer.

When reporting a malfunction please state the type and serial number (S/N) of the cabinet. This information is found on the name plate, see Fig. 7.

Location of the name plate:

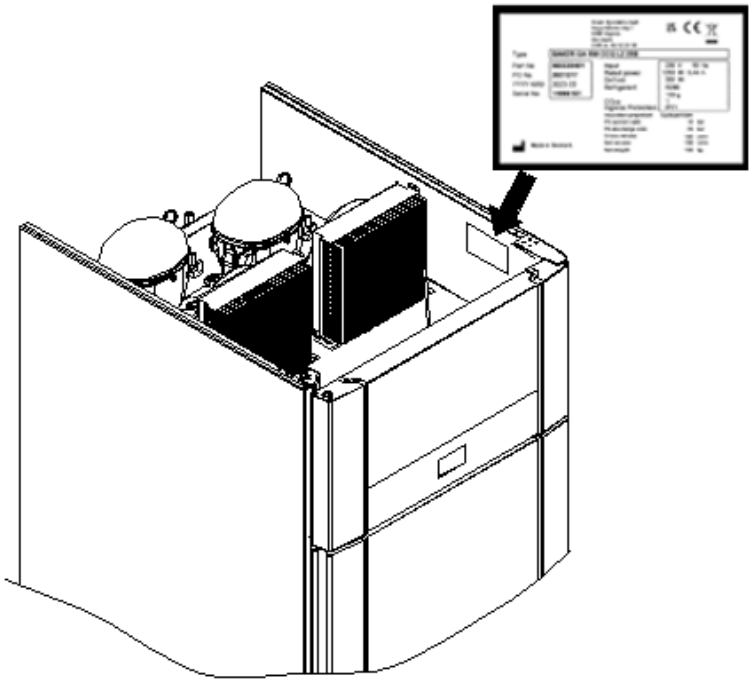

Fig.7

Disposal

Electrical and electronic equipment (EEE) contains materials, components and substances that can be dangerous and harmful to human health and the environment if the waste (WEEE) is not disposed of properly.

Products that are labelled with a “crossed-out wheelie bin” is considered electric and electronic equipment. The crossed-out wheelie bin symbolizes that waste of this type cannot be disposed of with unsorted municipal waste but must be collected separately.

Contact your local dealer when the product needs to be disposed of.

Please be aware of not damaging the refrigeration system and piping when a product is taken out of use. This will prevent the uncontrolled escape of the refrigerant from the refrigeration system.

The below only concerns the United Kingdom.

Disposal of an old cabinet is only available when we are delivering a new one at the same time. Cabinets must be fully defrosted and emptied prior to collection.

Gram Professional recognizes that our products for the catering market are considered as WEEE when they become obsolete. To ensure that Gram Professional’s responsibilities are handled correctly and environmentally friendly, we are signed up the largest Business to Business compliance scheme in the UK – B2B Compliance

http://www.b2bcompliance.org.uk

B2B Compliance will on our behalf deal with all areas of our responsibilities when collecting and disposing of equipment which fall under the UK WEEE regulations.

B2B Compliance can be contacted on telephone number 01691 676124.7

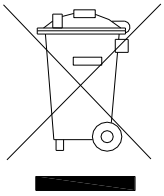

EC-Declaration of conformity

Producer	Name: Adress:	Gram Scientific ApS. (CVR No. 43122193) Aage Grams Vej 1, 6500 Vojens
	Tel.:	0045 73 20 12 00
Product	Model:	Baker SF 500 – SC 510 – SC 710
	Refrigerant:	R290
	Year:	2025

Directives

The product is in compliance with all the essential health- and safety requirements and provisons in:

Directive for Machinery 2006/42/EF

The product is where relevant in compliance with the following other directives:

Regulation 2015/1095

FCM regulation 10/2011

Regulation 1935/2004

RoHS 2 - 2011/65/EU

RoHS 3 - (EU) 2015/863

Standards

The following standards are used to the extent necessary to comply with the relevant directives:

DS/EN 12100:2011 - Safety of machinery -- General principles for design -- Risk assessment and risk reduction

DS/EN 60335-1:2012 – Household and similar electrical appliances. Safety. General requirements

DS/EN 60335-2-89:2010 – Household and similar electrical appliances. Safety. Particular requirements for commercial refrigerating appliances with an incorporated or remote refrigerant condensing unit or compressor

Person responsible for technical dossier	Company: Adress: Name:	Gram Scientific ApS. (CVR No. 43122193) Aage Grams Vej 1 John Lund

Signature Vojens 06/05-2025 R&D Manager

Declaration of incorporation of partly completed machinery

Producer

Name: Gram Scientific ApS. (CVR No. 43122193)
Adress: Aage Grams Vej 1, 6500 Vojens

Tel.: 0045 73 20 12 00

Product

Model: SF500 – SC500 – SC710

Refrigerant*: R404A, R407F, R407A, R507, R448A, R449A, R452A, R455A

*Not all models are available with these refrigerants.

PS: HP_{side}: 25 bar
LP_{side} : 14 bar

It is the responsibility of the person who assembles this subcomponent into a functioning whole, the PS of the plant is limited not to exceed the values set above.

Year: 2024

Directives

The product is in compliance with all the essential health- and safety requirements and provisons in:

Directive for Machinery 2006/42/EF (MD)

Pressure Equipment 2014/68/EU (PED)

The product is where relevant in compliance with the following other directives:

Regulation 2015/1095

FCM regulation 2002/72/EF

RoHS 2 - 2011/65/EU

RoHS 3 - (EU) 2015/863

Standards

The following standards are used to the extent necessary to comply with the relevant directives:

DS/EN 12100:2011 - Safety of machinery -- General principles for design -- Risk assessment and risk reduction

DS/EN 60335-1:2012 – Household and similar electrical appliances. Safety. General requirements

DS/EN 60335-2-89:2010 – Household and similar electrical appliances. Safety. Particular requirements for commercial refrigerating appliances with an incorporated or remote refrigerant condensing unit or compressor

Documentation

Refer to the name plate of the product and operating instructions.

Further documentation will be sent on request by relevant authorities.

Commisioning

The product must not be used until the finished machine for which it is to be incorporated in, has been declared as complying with the relevant provisions of the Machinery Directive.

Person responsible for technical dossier

Company: Gram Scientific ApS. (CVR No. 43122193)
Adress: Aage Grams Vej 1
Name: John Lund

Signature

Vojens 23/06-2025 R&D Manager

Wiring diagram SF 500

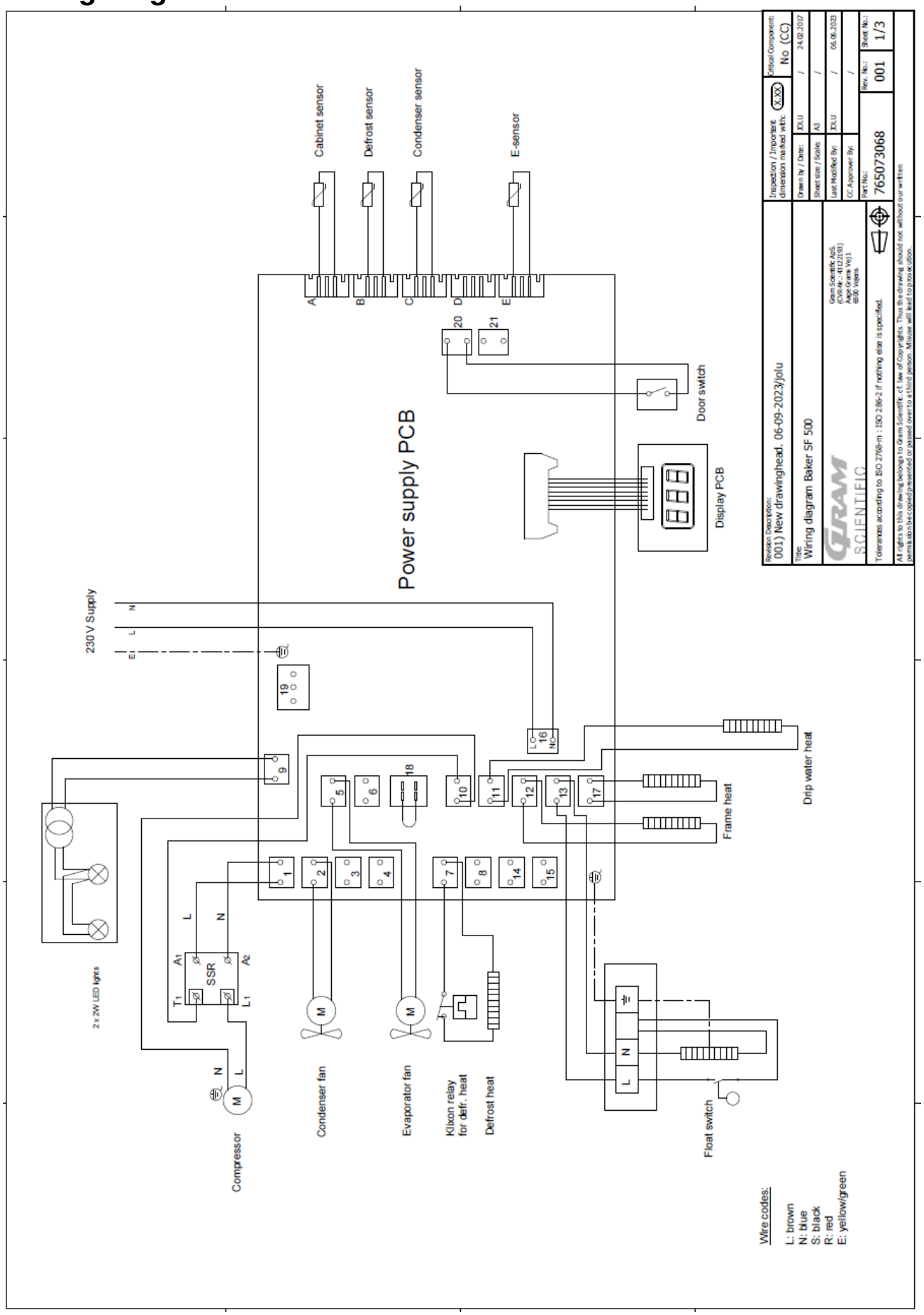

Wiring diagram SF 500 R (Remote)

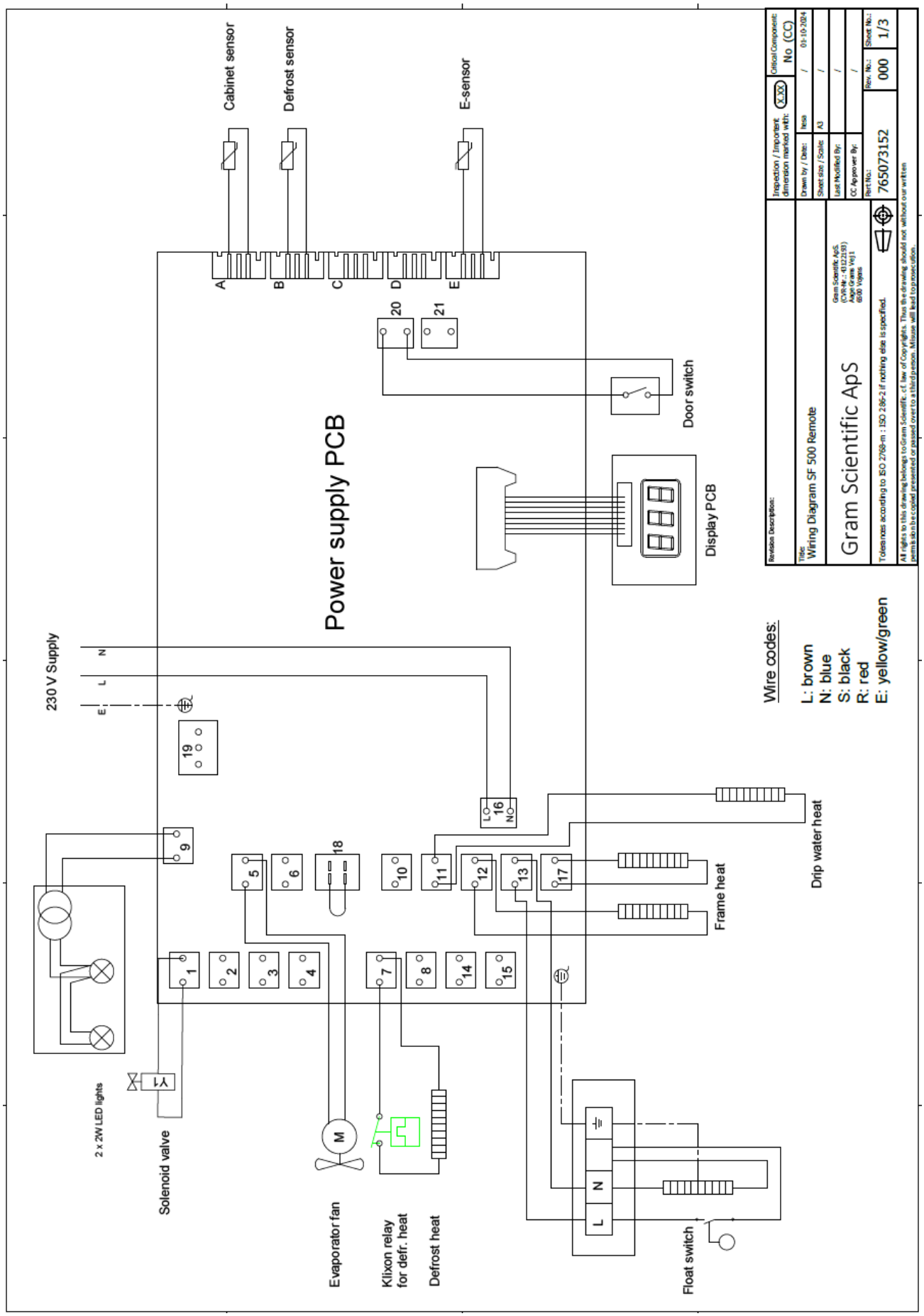

Wiring diagram SC 500

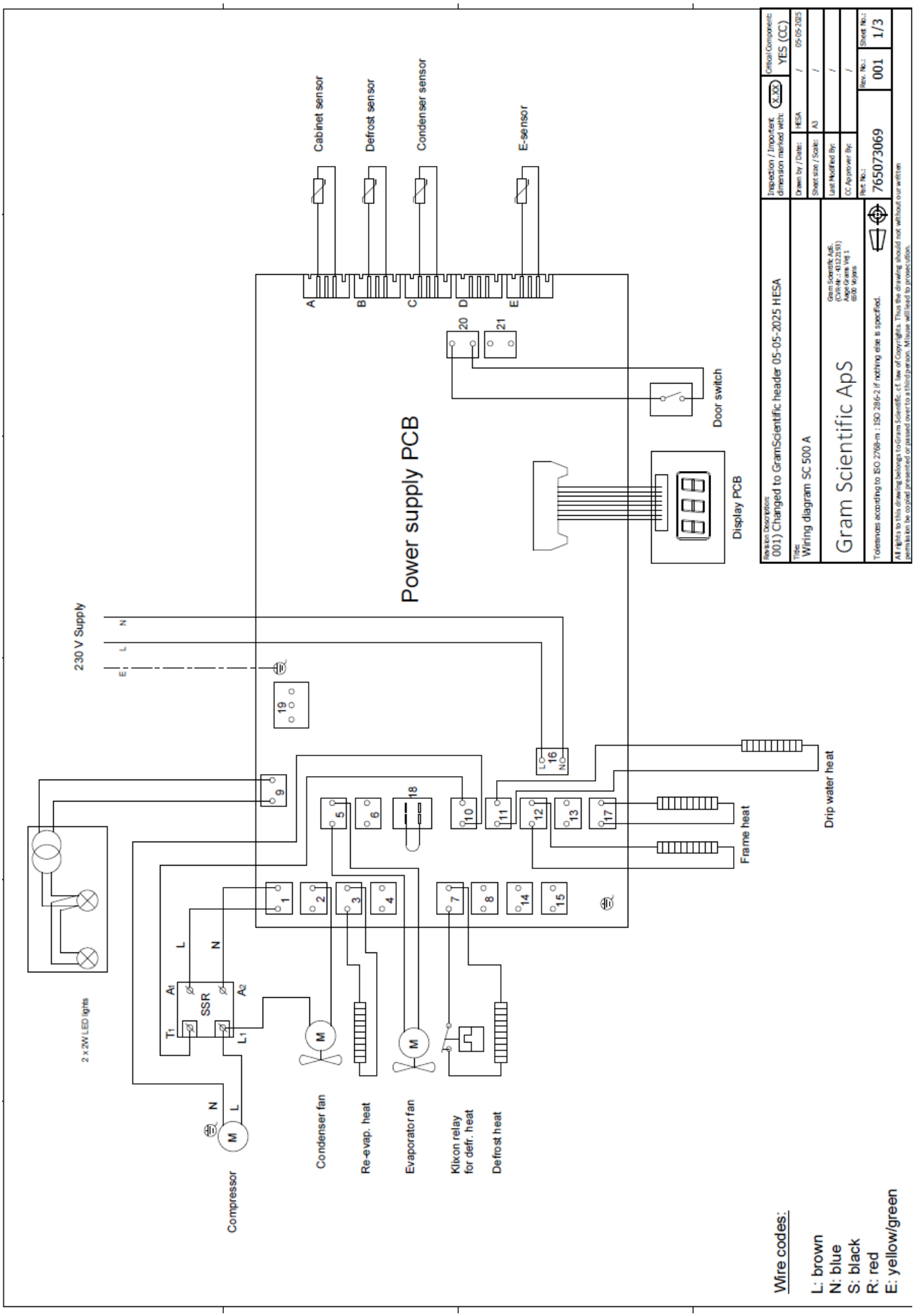

Wiring diagram SC 500 Remote

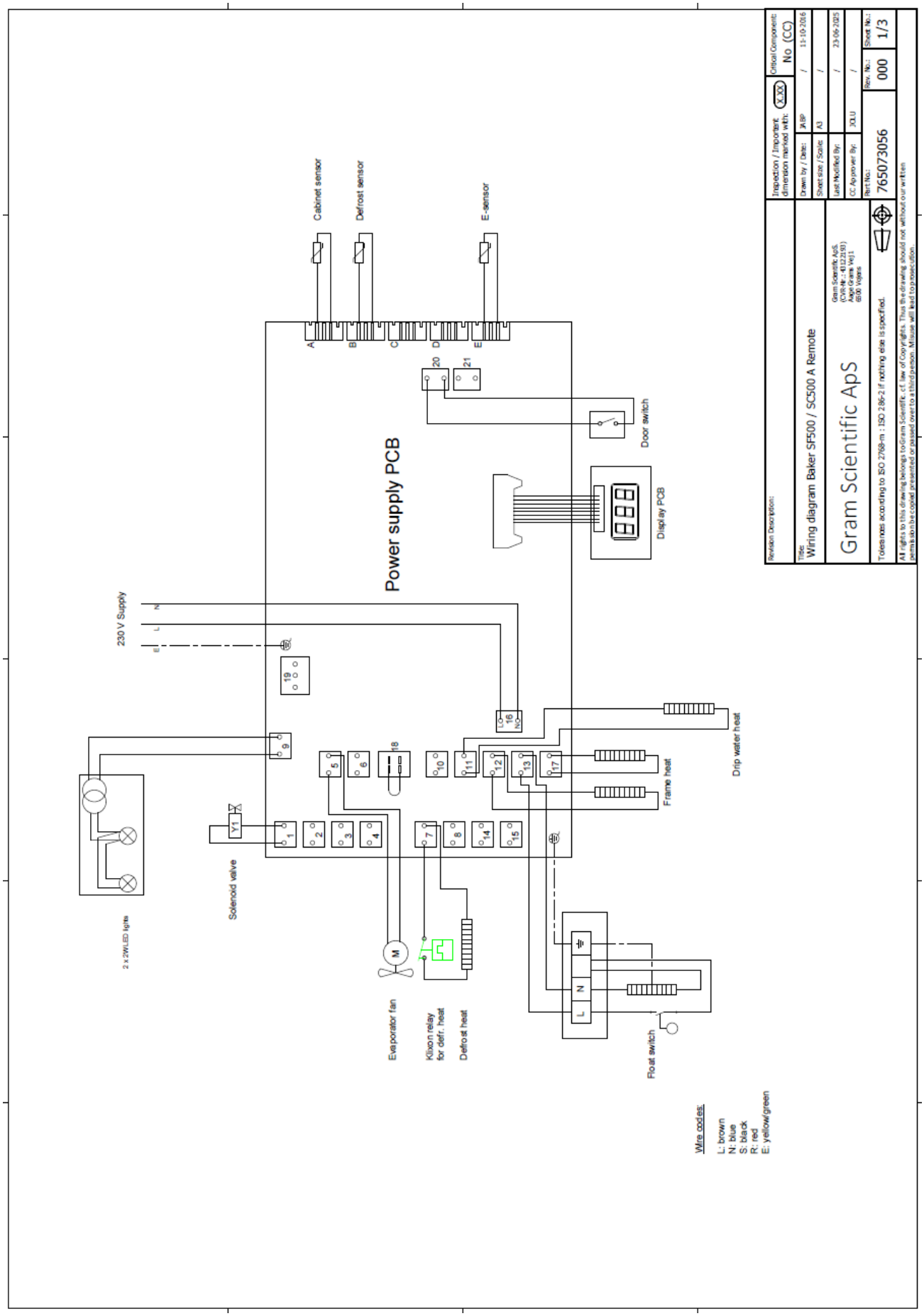

Wiring diagram SC 710

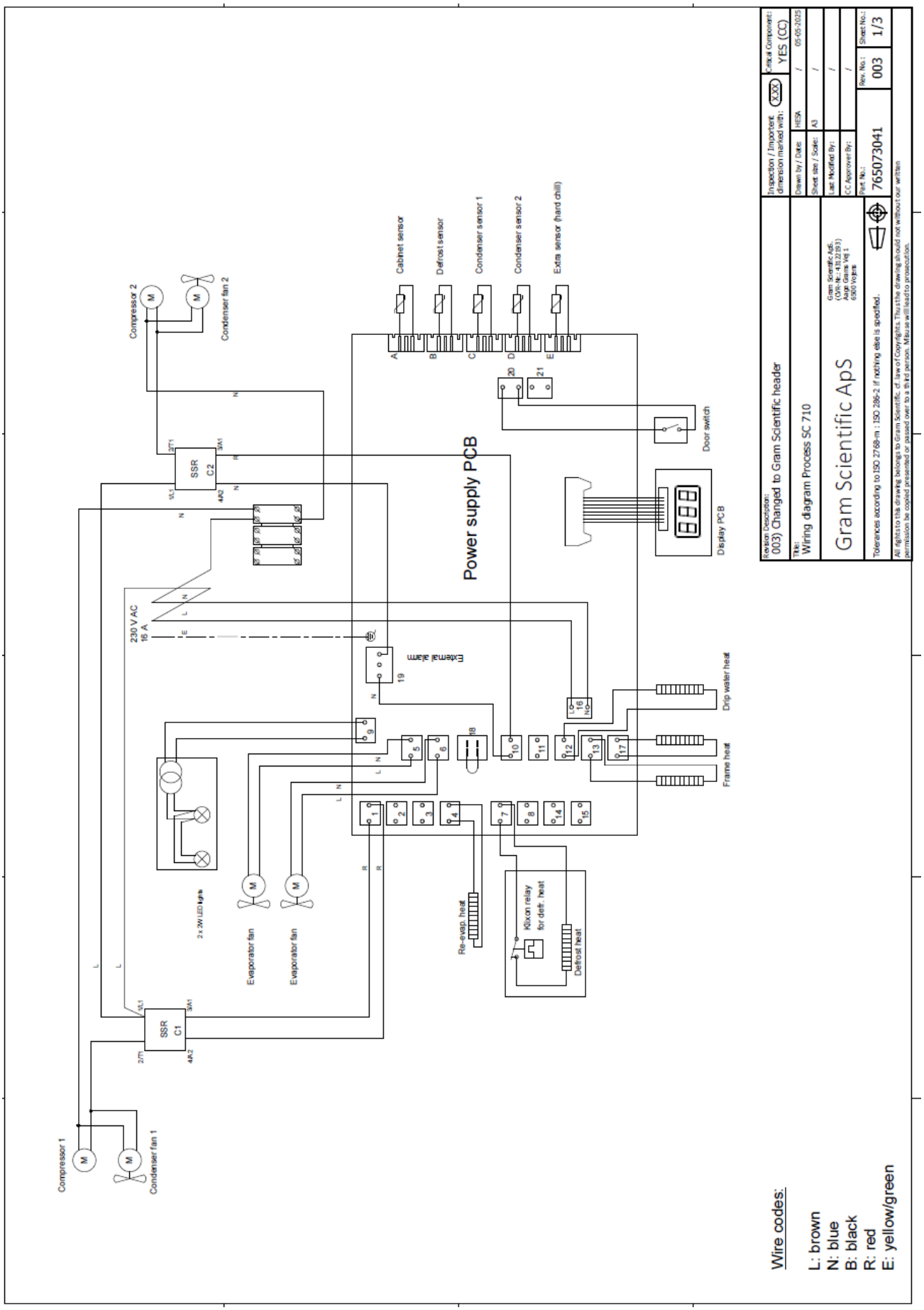

Wiring diagram SC 710 Remote

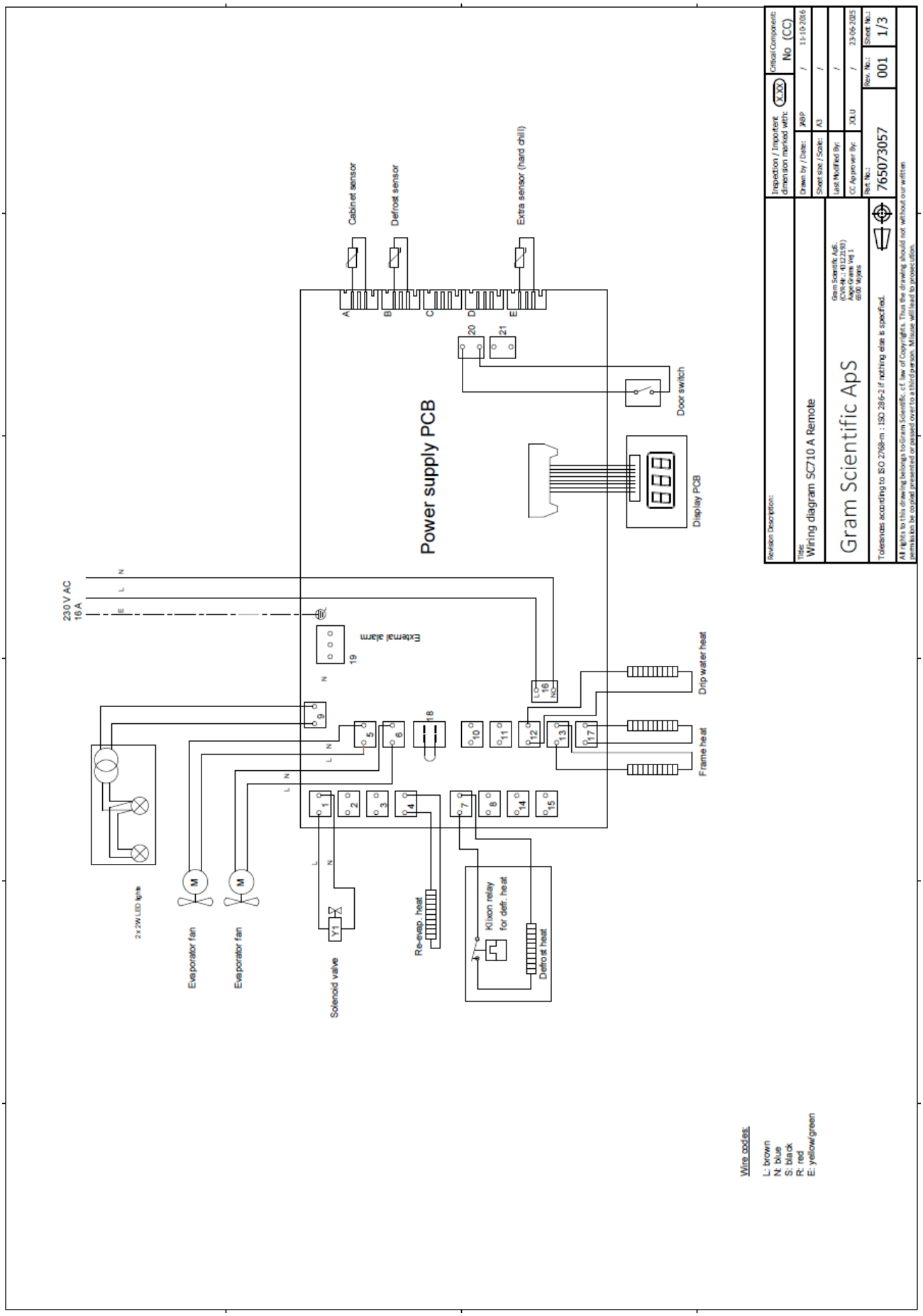

Piping diagram SF 500 / SC 500

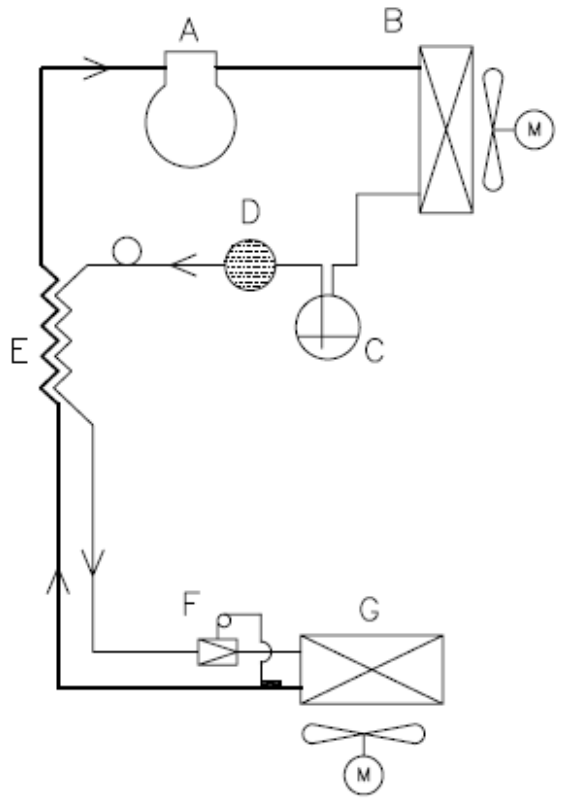

	DK	GB	D
A	Kompressor	Compressor	Kompressor
B	Kondensator	Condenser	Verflüssiger
C	Recipient	Receiver	Flüssigkeitssammler
D	Tørrefilter	Filter drier	Trockenfilter
E	Varmeudveksler	Heat exchanger	Wärmeaustauscher
F	Ekspansionsventil	Expansion valve	Ekspansionsventil
G	Fordamper	Evaporator	Verdampfer

Piping diagram SF 500 / SC 500 Remote

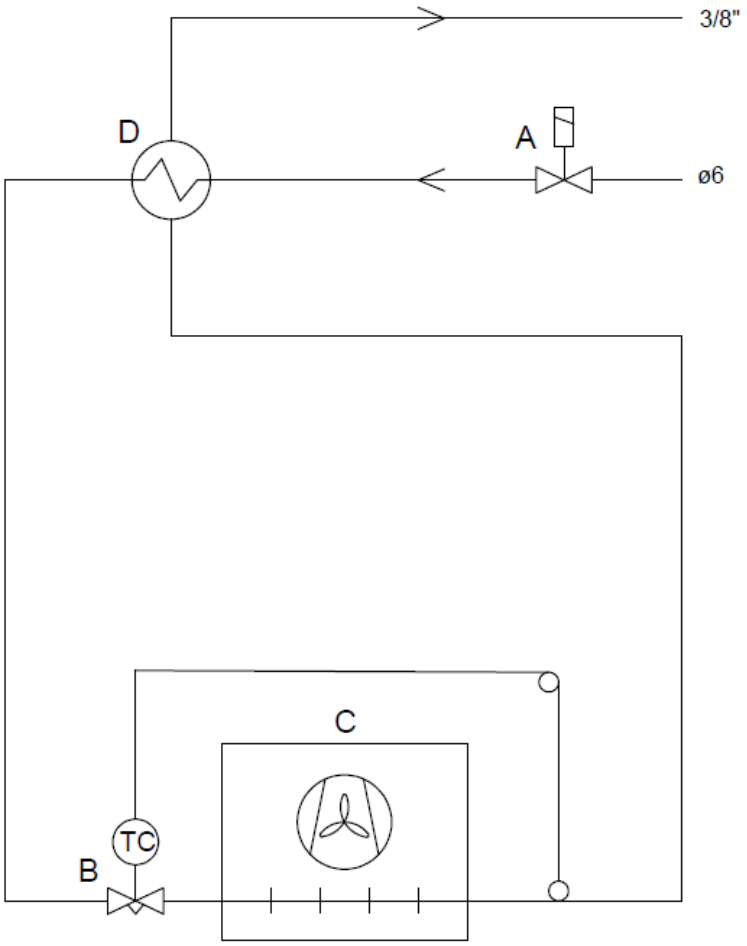

	DK	GB	D
A	Magnetventil	Solenoid valve	Magnetventil
B	Ekspansionsventil	Expansion valve	Ekspansionsventil
C	Fordamper	Evaporator	Verdampfer
D	Varmeudveksler	Heat exchanger	Wärmeaustauscher

Revision Description: 002) drawing head updatet 021024 jolu		Inspection / Importent dimension marked with: X.XX	Critical Component: No (CC)
Title: Piping diagram - Remote		Drawn by / Date:	JABP / 09-07-2010
		Sheet size / Scale:	A4 /
Gram Scientific ApS	Gram Scientific ApS. (CVR-Nr.: 43122193) Aage Grams Vej 1 6500 Vojens	Last Modified By:	JOLY / 01-10-2024
		CC Approver By:	/
Tolerances according to ISO 2768-m : ISO 286-2 if nothing else is specified.		Part No.: 765040845	Rev. No.: 002 / Sheet No.: 1/1

All rights to this drawing belongs to Gram Scientific. cf. law of Copyrights. Thus the drawing should not without our written permission be copied presented or passed over to a third person. Misuse will lead to prosecution.

Piping diagram SC 710

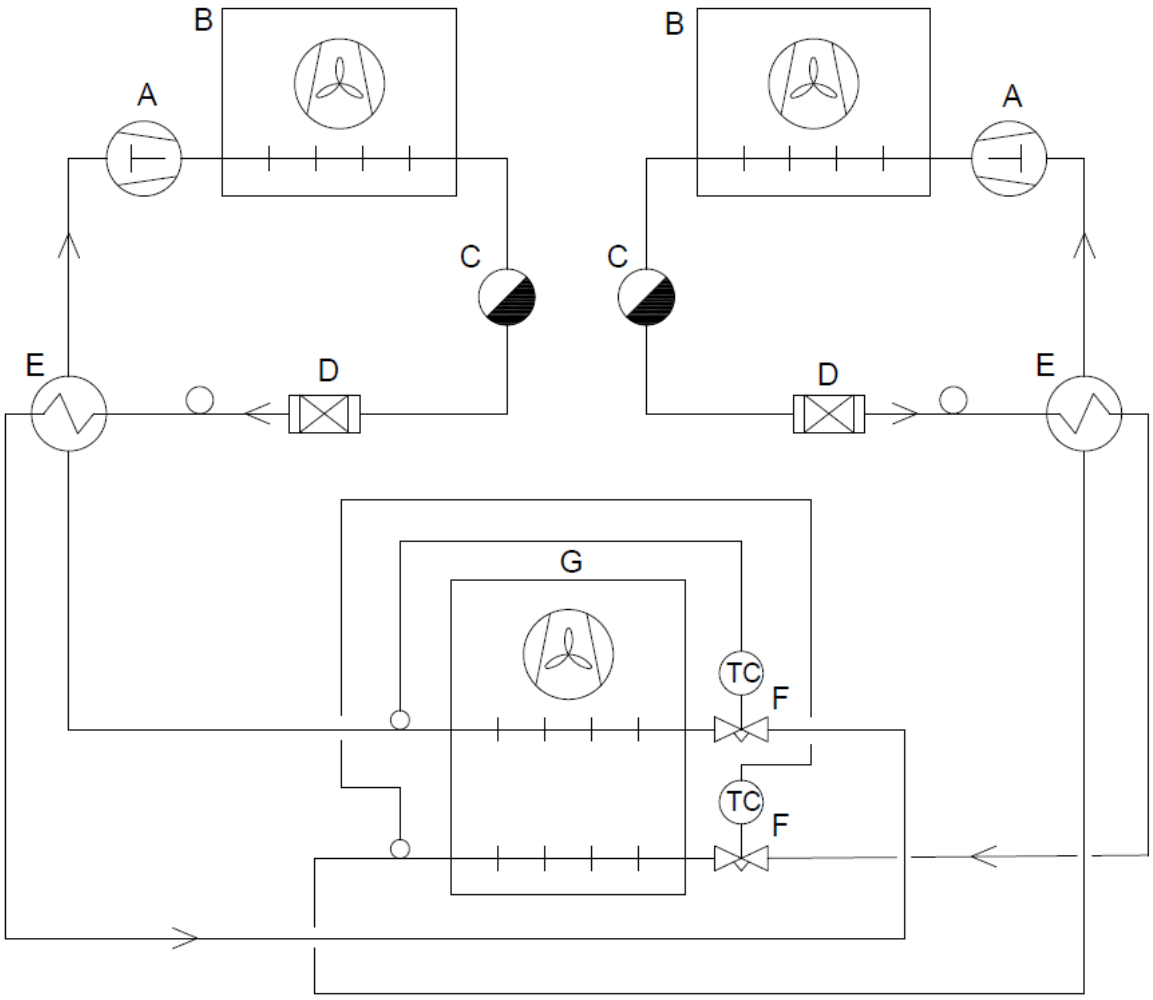

	DK	GB	D
A	Kompressor	Compressor	Kompressor
B	Kondensator	Condenser	Verflüssiger
C	Recipient	Receiver	Flüssigkeitssammler
D	Tørrefilter	Filter drier	Trockenfilter
E	Varmeudveksler	Heat exchanger	Wärmeaustauscher
F	Ekspansionsventil	Expansion valve	Ekspansionsventil
G	Fordamper	Evaporator	Verdampfer

Revision Description:		Inspection / Importent dimension marked with: X.XX	Critical Component: No (CC)
Title: Piping diagram Process SC 710 G		Drawn by / Date: JABP / 09-07-2010	
		Sheet size / Scale: A4 /	
Gram Scientific ApS	Gram Scientific ApS. (CVR-Nr.: 43122193) Aage Grams Vej 1 6500 Vojens	Last Modified By: JOLU / 05-05-2025	
		CC Approver By: /	
Tolerances according to ISO 2768-m : ISO 286-2 if nothing else is specified.		Part No.: 761254145	Rev. No.: 005 / Sheet No.: 1/1

All rights to this drawing belongs to Gram Scientific. cf. law of Copyrights. Thus the drawing should not without our written permission be copied presented or passed over to a third person. Misuse will lead to prosecution

Piping diagram SC 710 Remote

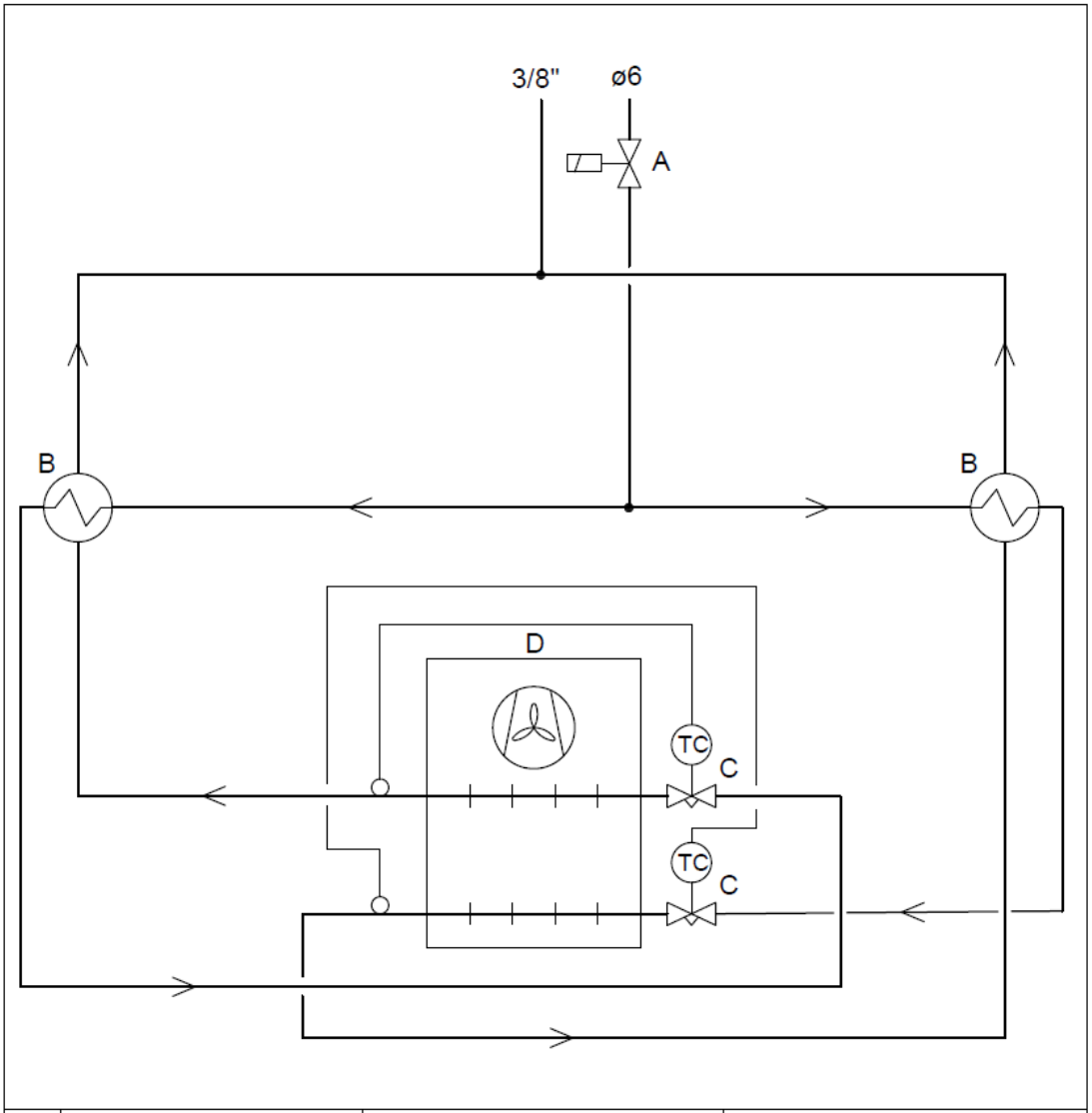

	DK	GB	D
A	Magnetventil	Solenoid valve	Magnetventil
B	Varmeudveksler	Heat exchanger	Wärmeaustauscher
C	Ekspansionsventil	Expansion valve	Ekspansionsventil
D	Fordamper	Evaporator	Verdampfer

Revision Description:		Inspection / Importent dimension marked with: X.XX	Critical Component: No (CC)
Title: Piping diagram Baker SF/Process KP remote		Drawn by / Date: JABP / 20-02-2013	
		Sheet size / Scale: A4 /	
Gram Scientific ApS	Gram Scientific ApS. (CVR-Nr.: 43122193) Aage Grams Vej 1 6500 Vojens	Last Modified By: JOLU / 23-06-2025	
		CC Approver By: JOLU / 23-06-2025	
Tolerances according to ISO 2768-m : ISO 286-2 if nothing else is specified.		Part No.: 765040972	Rev. No.: 002 / Sheet No.: 1/1

All rights to this drawing belongs to Gram Scientific. cf. law of Copyrights. Thus the drawing should not without our written permission be copied presented or passed over to a third person. Misuse will lead to prosecution.